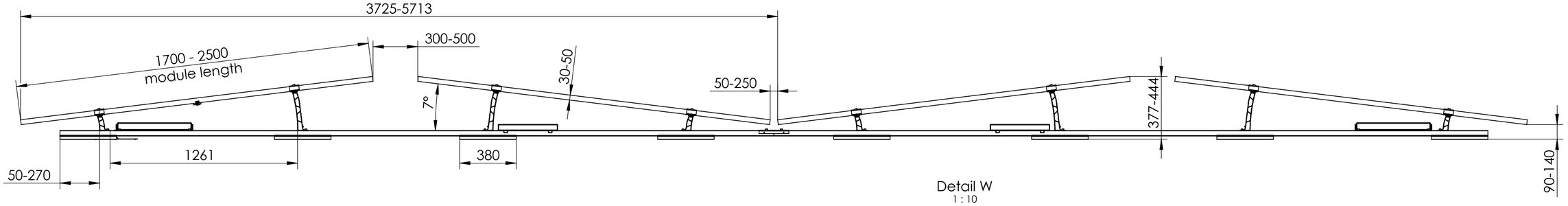

Plan view
1 : 50

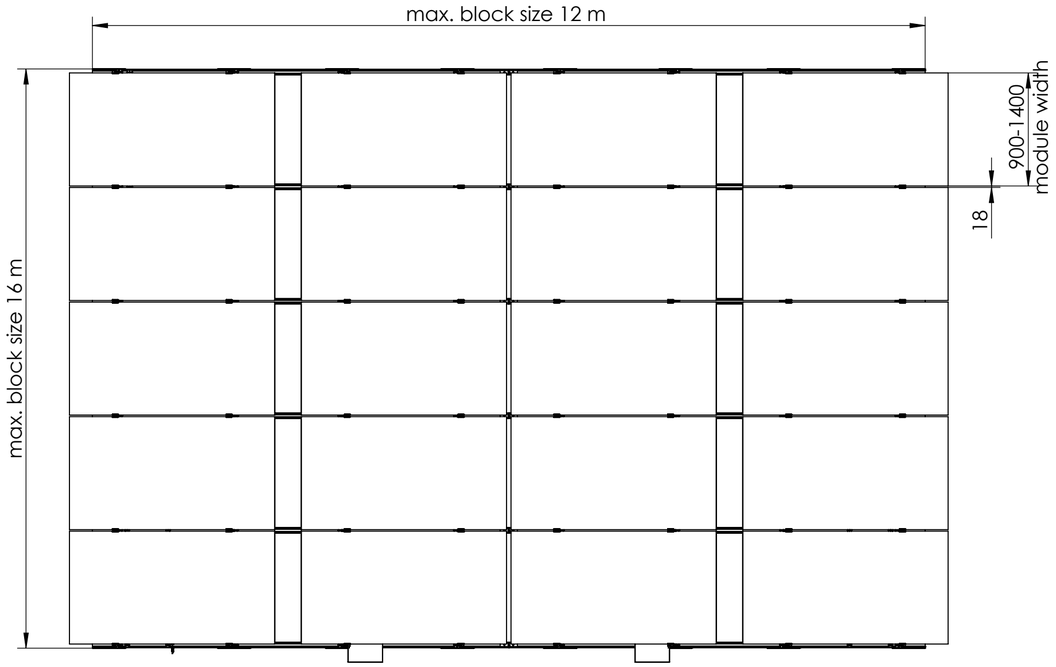

Detail W
1 : 10

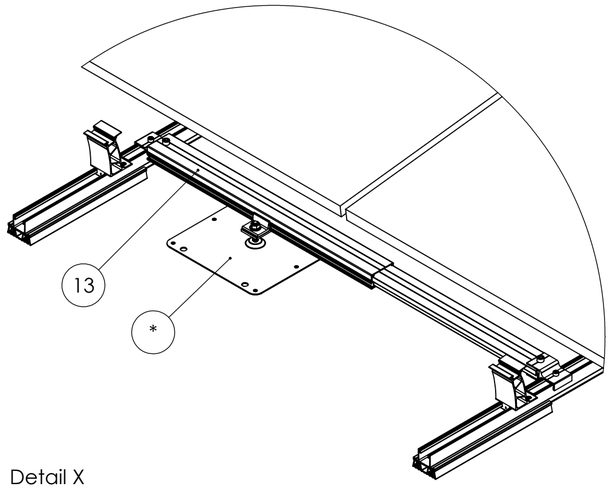

Detail Y
1 : 10

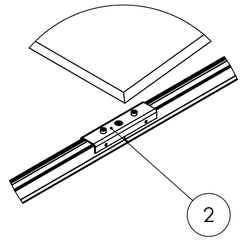

Detail X
1 : 5

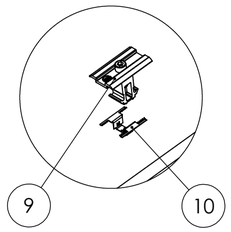

Detail Z

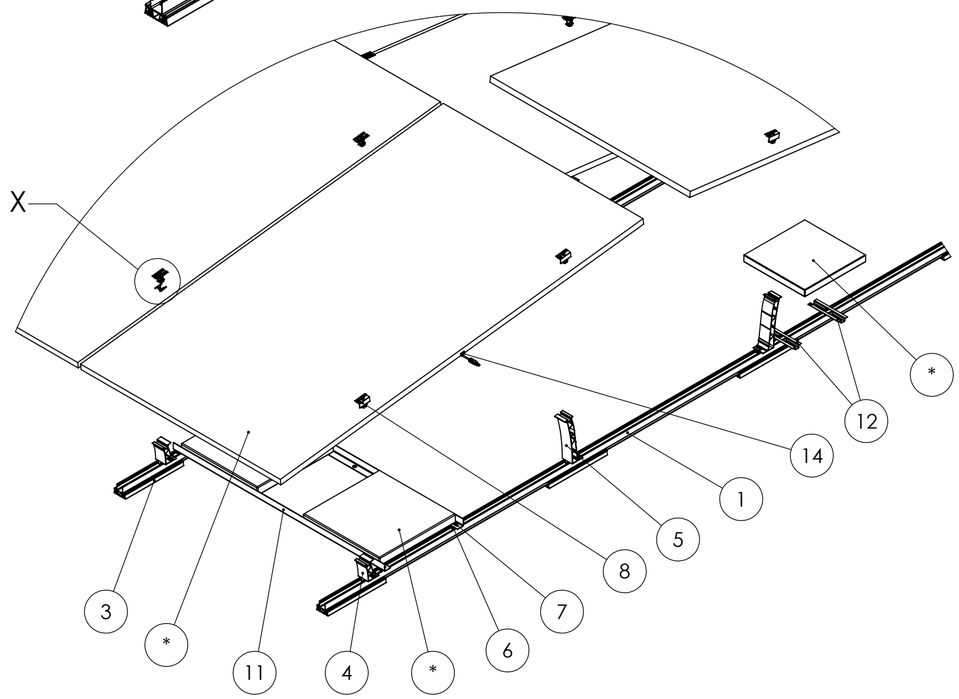

Isometric
1 : 100

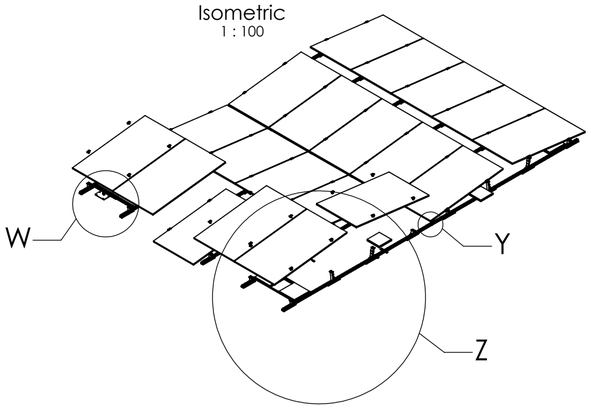

Pos.No.	Designation	Optional
1	K2 BasicRail 36	
2	Dome FlatConnector Set	
3	Dome Mat S 380	
4	Dome 6.07 SD	
5	Dome 6.07 Peak	
6	MK2	
7	Socket head bolt - serrated - sim. ISO 4762 - M8x20 - A2-70	
8	DomeClamp EC Set 30-50	
9	DomeClamp MC Set 30-50	
10	TerraGrif K2MI Duo 18	X
11	Dome Porter Flex	X
12	Dome SpeedPorter	X
13	Dome FixPro S	X
14	Alpha PV-Clip	X

Components marked with an asterisk (*)
are excluded from the parts list and are not supplied by K2 Systems.
For further information, please refer to the assembly instructions.

K2 Systems GmbH
Haldenstr. 1
71272 Renningen
Germany
+49 7159 42059-0

Designation: System Data Sheet D-Dome-6.07 Classic Portrait

	Name	Date	Material: -	
Designed		01.07.2026		
Approved	AKH	12.10.2026	Surface: -	
Last change	FGR	12.10.2026	Weight: -	Scale: 1:20

Number: E-00004233 | Revision: 01 | A2 | All dimensions in mm | Sheet 1 of 1

This drawing is the sole property of K2 Systems GmbH. It is protected by copyright and may only be copied, reproduced or distributed to a third party with explicit permission!

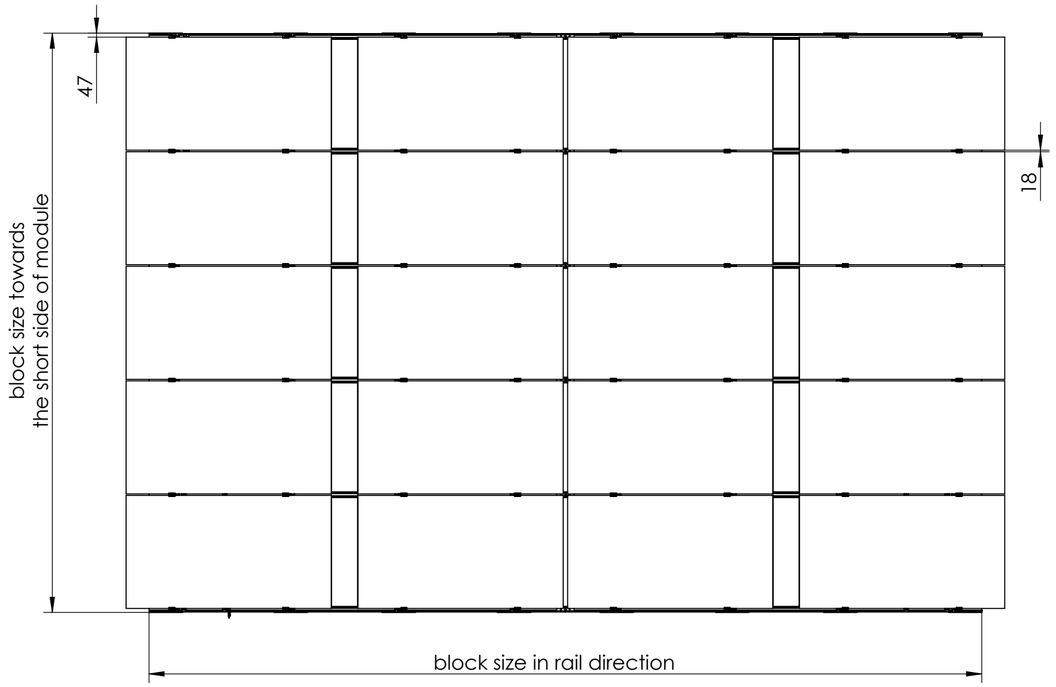

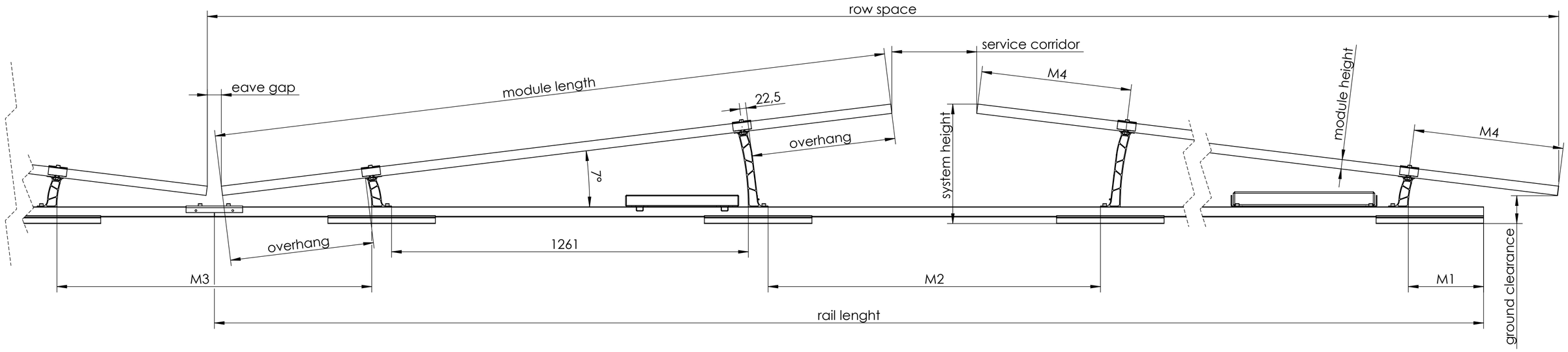

M1 = rail length - M3 / 2 - M2 - 2802
M2 = 2 * M4 * cos(7°) - 180 + service corridor
M3 = 2 * M4 * cos(7°) + 2 * module height * sin(7°) + eave gap
M4 = (module length - 161 / sin(7°)) / 2
row space = module length * cos(7°) * 2 + service corridor + eave gap + 2 * module height * sin(7°)
overhang = M4 - 22,5
ground clearance = 243.5 - (module length / 2) * sin(7°)
system height = 243.5 + (module length / 2) * sin(7°) + module height * cos(7°)

K2 Systems GmbH
Haldenstr. 1
71272 Renningen
Germany
+49 7159 42059-0

Designation: System Data Sheet D-Dome-6.07 Classic Portrait

	Name	Date	Material: -		
Designed		01.07.2026			
Approved	AKH	12.10.2026	Surface: -		
Last change	FGR	12.10.2026	Weight: -	Scale: 1:20	

Number: E-00004233 | Revision: 01 | A2 | All dimensions in mm | Sheet 1 of 1

This drawing is the sole property of K2 Systems GmbH. It is protected by copyright and may only be copied, reproduced or distributed to a third party with explicit permission!